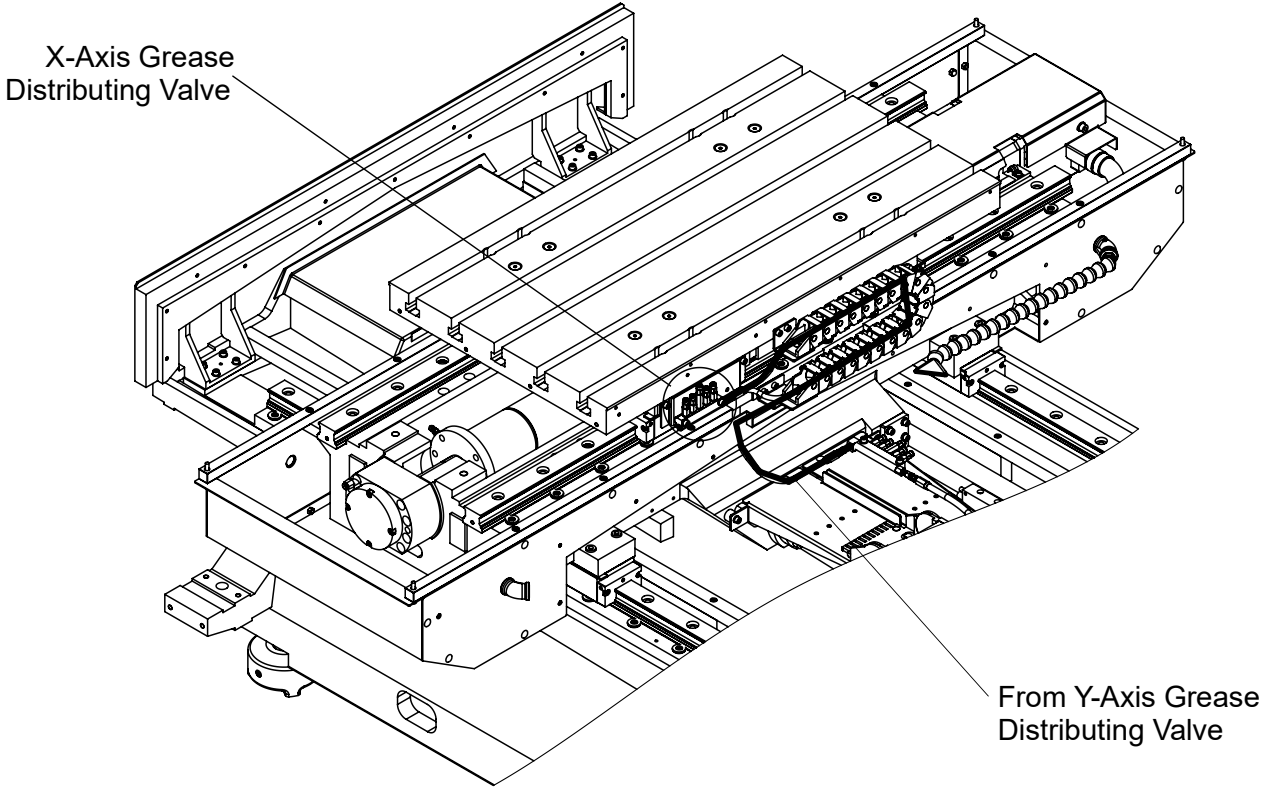X-Axis Grease Piping Route